PAPER No. 464

Pumped Storage as Peaking Station in an Interconnected Grid System

BY

Engr. Daud Beg

B Sc. (Hons) Engg., D.I.C. (London), C. Eng. F.I.E.E.,
M.I. Mech. E , M B.I.M., General Manager (Distribution) Power, WAPDA.

PUMPED STORAGE AS PEAKING STATION IN AN INTERCONNECTED GRID SYSTEM

BY

Daud Beg (*)

INTRODUCTION

The recent power crisis in Pakistan has brought into focus the necessity of overcoming the shortage of power at peak periods by cheaper generation. The economic restraints do not allow the luxury of abundant reserve power generation facilities to be installed. Pumped Storage schemes can admirably fill the gap for meeting the peaking requirements.

As the fuel resources of the world are being drawn upon very heavily, and the cost of fuel is rising astronomically, it is not advisable to instal fuel-power stations for peaking. Moreover, the steam power stations take a considerable time to come to full load and whenever the generators are started or shutdown, there are inevitable losses in the boilers. The Nuclear Power Stations have accentuated the problem. Their operation for base load at high load factors is economical but complementary peaking facilities must be provided for.

Hydro-electric Stations with vast amount of storage would be ideal, so that whenever desired these reserves can be relied upon. The stored volume of water can only be increased by increasing the cost of Civil Works many times over. The rainfall and runoff, and the regimes of various rivers, are unpredictable. The seasonal variations of Mangla, Warsak and Tarbela are largely responsible for the serious power shortages which visit us with regular frequency every winter.

(*) B.Sc. (Hons) Engg., D.I.C. (London)., C.Eng.,F.I.E.E., M.I.Mech. E., M.B.I.M., General Manager (Distribution) Power, WAPDA,

In such conditions, consideration of pumped storage becomes imperative. Reversible water turbines have been developed and successfully used at many sites in the world including Niagara Falls. Reversible water-turbines were developed by French Engineer, Deriaz, in early fifties. These are essentially Francis type turbines where the runner pitch can be varied so that the machine can either operate as a turbine or a pump. Pumped-Storage Schemes can be ideally used in conjunction with Nuclear Power Stations, where off-peak power at night can be utilized to run the pumps and store the water in the reservoir at the higher elevation. This additional storage helps generation during the peak-load periods.

A Nuclear Power Station of 900 MW is planned at Chashma by 1991 and more Nuclear Power Stations may have to be added if the spiralling fuel costs prohibit the addition of the conventional Thermal power stations. Pumped Storage Schemes would be required to complement these base-load stations. The series of dams in Kaghan Valley can provide suitable locations for pumped-storage. Kalabagh site has subsidiary Soan valley which can be used for pumped storage. This paper would have achieved its objective if the attention of engineers is focussed to the problems of peak-generation and the possible role which pumped storage schemes can play in mitigating this problem.

PUMPED STORAGE - A CASE STUDY

The following case study was developed in a dissertation presented by the author at the Imperial College, London, and has been modified to represent hypothetical conditions in a Grid System with the peak load of 1000 MW which can be suppressed to 900 MW by load-staggering.

The pumped-storage dam site can provide a gross-head of 910 feet and an average net head of 810 feet with a reservoir capacity of 35 million cubic metres. (These are assumed figures which could probably apply to a dam in Kaghan Valley near Paras).

The following mathematical treatment can be applied to any load curve:

Let N_B = Base load capacity.

N_p = Peak load capacity.

T_o = Base Load Period (say one day)

T_p = Peak Load Period.

Then,

$$T_o N_B + t_p N_p = \alpha_o T_o N = \alpha_o T_o N_B + \alpha_o T_o N_p$$

$$\text{or } N_p = \frac{(1-\alpha_o) T_o N_B}{\alpha_o T_o - t_p}$$

$$= \frac{(1-\alpha_o) T_o N}{T_o - t_p}$$

(α_o = Load factor of the whole grid)

Again, assuming that η_T and η_P are efficiencies of the turbine and pump, then $\frac{N_p \; t_p}{\eta_T \; \eta_P}$ is the energy required by pumps, to feed back the water for peak load storage.

Or $\rho = \frac{N_p \; t_p}{\eta_T \; \eta_P \; N_B \; T_o}$

(%age of base load energy $N_B \; T_o$).

Storage Capacity V is given by the following formula (metric),

$V = Q$ (in Cumecs) x 3600 t_p)

But $N = \frac{1000 \eta_T \; Q \; H}{75}$ in h p (metric)

$V = \frac{270 \; t_p}{\eta_T \; H}$

For the present case study,

Reservoir Capacity = V = 35 million cubic metres

Average Net Head = 810 ft. = 247 metres.

$\eta_T = 0.80$

t_p = 3 hours (Peak hour period).

Then substituting the values in the formula

$$V = \frac{270 \; t_p}{\eta_T \; H} . N$$

$$35 \times 10^6 = \frac{270 \times 3}{0.80 \times 247} \times N$$

N = 85 million H P metric

On the other hand, if we consider the load curve and use the formula

$$N_p \; \frac{(1-\alpha_o) \; T_o \; N}{T_o - t_p}$$

$\alpha_o = 0.65$ t_p = 3 hours

$$N_p = \frac{(1-0.65) \times 24 \times 900}{21} = 350{,}000 \text{ kW}$$

If the actual installed capacity of the plant is less than the capacity found out on the basis of the reservoir storage, the reservoir will be able to absorb the normal flow from the natural and artificial catchment areas for a considerable period.

LOAD DURATION CURVE TO DETERMINE INSTALLED CAPACITY OF PUMP STORAGE.

The load duration curve of a system can be represented as shown in Fig.1. The maximum load on the system is M=1 at t = o. N_B represents the base load while N_p is the peak load. N_p max would occur at time t = o

θ_s the load factor for the whole system

$$= \frac{1}{MT} \int_0^T N \, dt$$

For Partial Loads.

$$\theta_B = \frac{1}{N_{Bmax} \, T} \int_0^T N_B \, dt$$

$$\text{and } \theta_P = \frac{1}{N_{Pmax} \, T} \int_0^T N_P \, dt$$

$$\text{or } \theta_P = \frac{1}{N_{Pmax} \, T} \int_0^T (N - N_B) \, dt$$

$$= \frac{M}{N_{Pmax}} \frac{1}{MT} \int_0^T N \, dt - \frac{N_{B\,max}}{N_{P\,max}} \frac{1}{N_{B\,max} T} \int_0^T N_B \, dt$$

$$\theta_P = \frac{M}{N_{P\,max}} \theta_S - \frac{N_{B\,max}}{N_{P\,max}} \theta_B$$

The above formula could be extended to any number of stations. (Fig.2).

$$\theta_P = \frac{M}{N_{Pmax}} \theta_S - \frac{N_{i\,max}}{N_{P\,max}} \theta_B$$

Which is a fundamental formula applicable to any case of load duration curves.

For the present case study,

M = 900 MW (flattened curve)

$N_{p\ max}$ = 350 MW.

N_B = 550 MW.

θ_S = 0.65 (assumed).

θ_B = 0.80

Then $\theta_p = \frac{900}{350} \times 0.65 - \frac{550}{350} \times 0.80$

$= 1.67 - 1.26$

$= 0.41$

(Note high θ_p obtained, which means the high utilization of peak load station. A higher θ_B would be preferable).

If the shape of duration curve is not known, then the formula of Sochinski may be applied.

$$N = M \left[1-(1-\theta_o)t \quad \frac{\theta-\theta_o}{1-\theta}\right]$$

Where t = relative time

θ = System load curve

$\theta_o = \frac{m}{n} = \frac{\text{Minimum Load}}{\text{Maximum Load}}$

Relationship of $\theta_o = \theta^{2.1}$ to $\theta^{2.5}$ has been advised, although various actual load curves will yield different values of θ_o.

Taking our case study,

M = 900 MW m = 230 MW

θ_o = 0.256 θ = 0.65

$\theta^{x} = \theta_o$ or (o 65)^{x} = o 256)

x = 3.15 (as compared to 2.1 to 2.5 by Sochinski)

If the load curve was not flattened

$M = 1000$ MW $\qquad m = 230$ MW

$\theta_0 = 0.23 \qquad \theta = 0.59$

$\theta^x = \theta_0$ or $(0.59)^x = 0.23$

$x = 2.78$

However, since the load and duration curves are mostly known in any system, it would not be necessary to assume Sochinski formula.

The duration curve is now represented in Fig.3.

N_1^* is the installed tubine capacity

$N_o = N_B$ is the base generating capacity with load factor of θ_B^*.

N' represents the base load duration curves.

The following relationship can be established.

$$\theta_P = \frac{A_1}{N_1^* \; T} \qquad A_1 = \eta A_2 \quad [\eta = \text{Efficiency of Pump unit}]$$

$$\theta_B^* = \theta_B + \frac{A_2}{N_B \; T}$$

$$A_1 = \theta_P \; N_1^* \; T = 0.41 \times 350 \times 24 \times 1000 = 3.45 \times 10^6 \text{ KWh/day}$$

$$A_2 = \eta A_2$$

$$A_2 = A_1/\eta = \frac{3450 \times 1000}{0.7} = 4.92 \times 10^6 \text{ KWh/day}$$

$$\theta_B^* = \theta_B + \frac{A_2}{N_B \; T} = 0.80 + \frac{4920 \times 1000}{550 \times 1000 \times 24}$$

which yields an impossible figure. $\theta_B^* \not> 1$

It is required that the total pumping power should be supplied from within the system so that $\theta_B^* \approx 1$

This is not satisfied by $N_T = 350$ MW out of a total of $M = 900$ MW.

By trial and error N_T = 240 MW satisfies

Then N_{Base} = 660 MW.

$$\theta_S = 0.65$$

$$\theta_B = 0.75$$

$$\theta_P = \frac{900}{240} \times 0.65 - \frac{660}{240} \times 0.75 = 2.44 - 2.06$$

$$= 0.36$$

$$\theta_P = \frac{A_1}{N_1^*} \quad \text{or} \quad A_1 = \theta_P \; N_1^* \; T$$

$$A_1 = 0.36 \times 240 \times 24 \times 1000$$

$$= 2060 \times 1000 \text{ KWHr/day}$$

$$A_2 = \frac{A_1}{\eta}$$

$$= \frac{2060 \times 1000}{0.7}$$

$$= 2800 \times 1000 \text{ KWhr/day}$$

$$\theta_B^* = \theta_B + \frac{A_2}{N_B T}$$

$$= 0.75 + \frac{2800 \times 1000}{660 \times 1000 \times 24}$$

$$= 0.75 + 0.18$$

$$= 0.93, \text{ which is suitable}$$

So the total installed capacity of pumped storage scheme in this case study would be 240 MW.

In the above treatment turbine losses, generator losses and the friction losses have been considered. The transformer and line losses have not been taken into account.

The time taken in putting a set into operation represents loss of energy. A great advantage in the case of hydro-electric stations is that they can be put on full load in a short time (app; 130 seconds).

A pump can take full load in 3 minutes. The graphical representation is shown in Fig.4.

The loss is represented as follows:

$\Delta E = \Delta NT$

over a period T

EFFICIENCY OF PUMPED STORAGE

The overall efficiency of a pumped storage scheme is rather low due to double conversion of energy, firstly the storage of water at a higher altitude by pumping and secondly the generation of electricity through the turbines.

The maximum efficiency of large centrifugal pump is about 88% while that of a Francis turbine is 92%.

Adopting these figures, the overall efficiency of conversion is as follows:

Pumping	Efficiency of Unit percent	Overall efficiency of Conversion per cent.
Transformer	98%	98%
Motor	96%	94%
Pump	88%	83%
Pipeline	98%	81%
Generating		
Pipeline	96%	78%
Turbine	92%	72%
Generator	96%	69%
Transformer	98%	67.5%

In the case of large interconnected grid network additional losses of 10% may be expected and the overall efficiency will be 60.75%.

TYPES OF PUMPING SCHEMES

Three types of pumped storage schemes may be designed..

(i) For improvement of the daily plant curve of a particular hydro-station. Such schemes are mostly on small, run-of-the river plants.

(ii) For improving the daily operating conditions of a large interconnected grid network. Such schemes normally have two storage reservoirs of adequate capacity forming the head and the tailpond to even out the load curve on a daily basis for a large grid.

(iii) For supplementing the natural flow to a storage reservoir which is insufficiently supplied from its natural catchment areas. This is on a seasonal basis.

The schemes of types (ii) and (iii) are likely to serve the operating conditions in Pakistan.

The machinery required for a pumped storage scheme would be the conventional turbine-alternator, if the turbine is of a moving-vane type, or feathering-runner as in the case of Deriaz-type turbine. Alternatively, separate turbine and pump are installed, with a coupling, which can be disengaged for operation either as a pump or as a generator.

Economics of a pumped storage scheme can be independently worked out for individual schemes. However, since the efficiency of a pumped storage scheme is approximately 60% the cost of the peak-load generation will be nearly double the cost of energy (KWH) used for pumping. However, the saving in the capital cost of additional installed generation equipment would more than offset this disadvantage. Pumped storage can be utilised where there are series of dams providing storage reservoirs at different altitudes. Pakistan offers many such suitable sites for development.

At present there are more than 100 pumped storage schemes around the world. The characteristics of a few of these schemes are given in Table-1.

TABLE-I : LEADING PARTICULARS OF VARIOUS PUMPED STORAGE SCHEMES

Station	Country	Type of unit installed	Max.delivery head, (ft.)	No. of turbines	Turbine h.p.
Niagara	Canada	Deriaz	40-85	6	53,000
Tremorgio	Switzerland	H.S.C.U.	2960	1	15,000
Belleville	France	H.S.C.U.	1730	2	4,500
Etzel	Switzerland	V.S.C.U.	1580	6	20,000
Lassoula	France	H.S.C.U	1550	3	5,000
Limberg	Austria	H.S.C.U.	1380	2	80,000
Witznau	Germany	V.S.C.U.	875	4	85,000
Waggital	Switzerland	V.S.S.P.	850	4	22,200
Sillre	Sweden	V.S.C.U.	740	1	10,000
Hausern	Germany	V.S.C.U.	720	4	47,000
Herdecke	Germany	H.S.C.U.	545	4	49,500
Niederwartha	Germany	H.S.C.U.	504	4	30,000
Leitzach	Germany	H.S. S.P.	425	1	11,000
Lac Noir	France	V.S.C.U.	420	4	40,000
Bleiloch	Germany	H.S.C.U.	185	2	29,000
Hemfurth	Germany	V.S.C.U.	120	2	7,800
Beldoney	Germany	V.S.P.T.	33	1	1,500
Ffestiniog	U.K.	V.S.C.U.	1000	4	80,000

H.S.C.U. = Horizontal-shaft turbine and pump, combined

V.S.C.U. = Vertical-shaft turbine and pump, combined

H.S.S.P = Horizontal-shaft turbine with separate pump.

LIST OF FIGURES

Figure No.	T i t l e
Fig-1 to Fig-4.	Duration Curves.
Fig-5.	Load Efficiency Curves for Turbine Type.
Fig-6.	A Typical Pumped Storage Scheme.

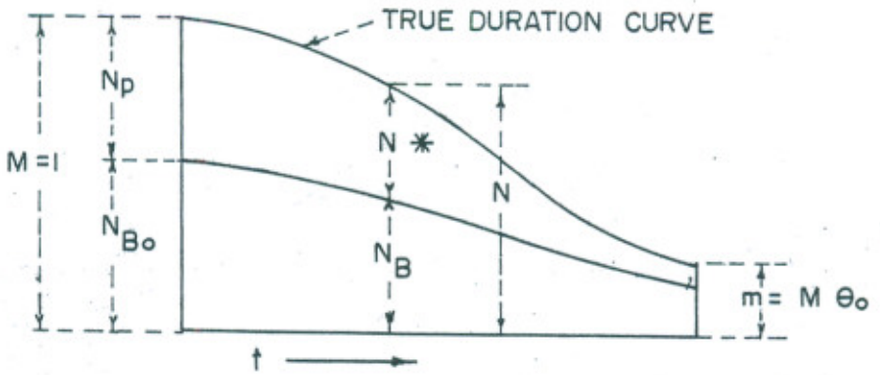
TRUE DURATION CURVE
Np
M = 1
N*
N
NBo
NB
m = M θo
t

FIG – 1

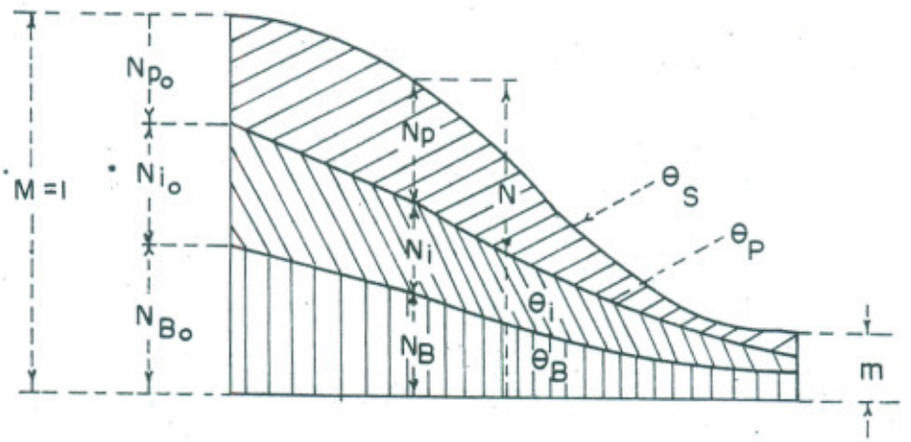
Npo
Np
M = 1
Nio
N
θS
θP
Ni
θi
NBo
NB
θB
m

FIG – 2

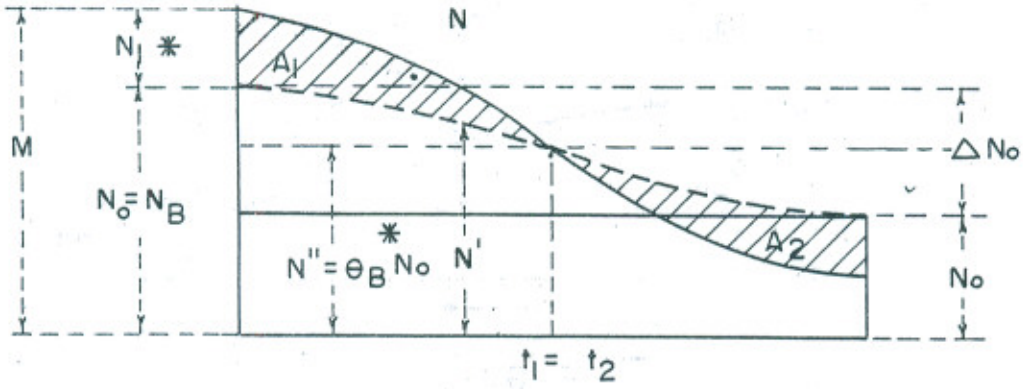
N
N_1 *
A_1
M
$N_o = N_B$
ΔN_o
$N'' = \theta_B N_o$ *
N'
A_2
N_o
$t_1 = t_2$

FIG – 3

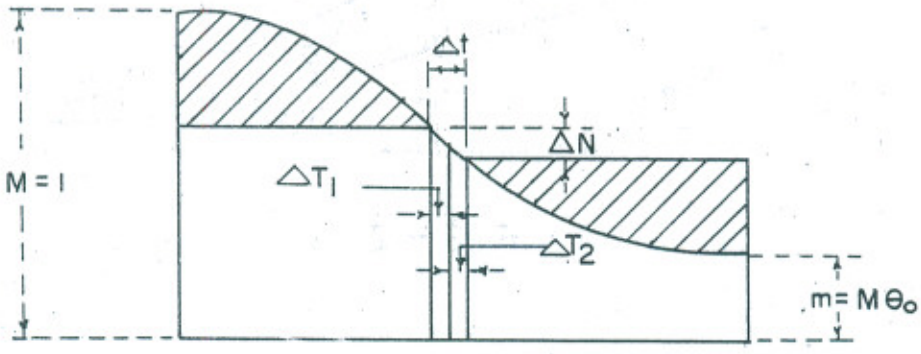
Δt
ΔN
M = 1
ΔT_1
ΔT_2
$m = M\theta_o$

FIG – 4

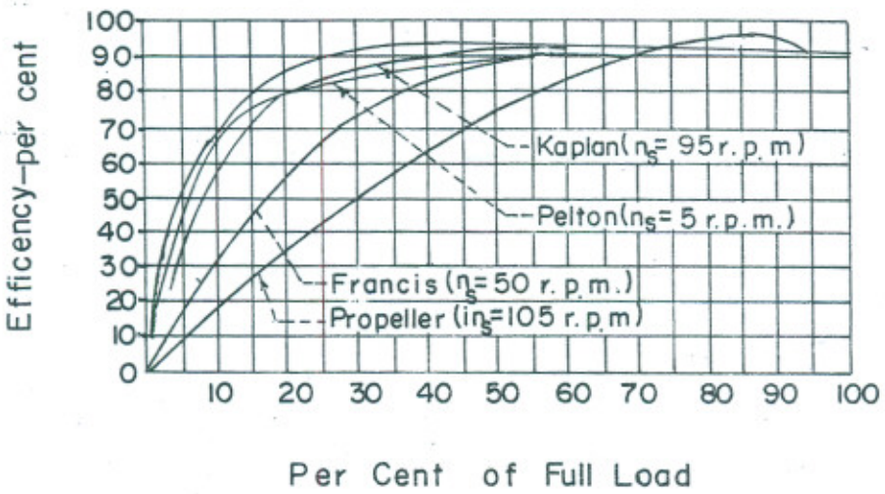

FIG — 5

LOAD EFFICENCY CURVES FOR TURBINE TYPE

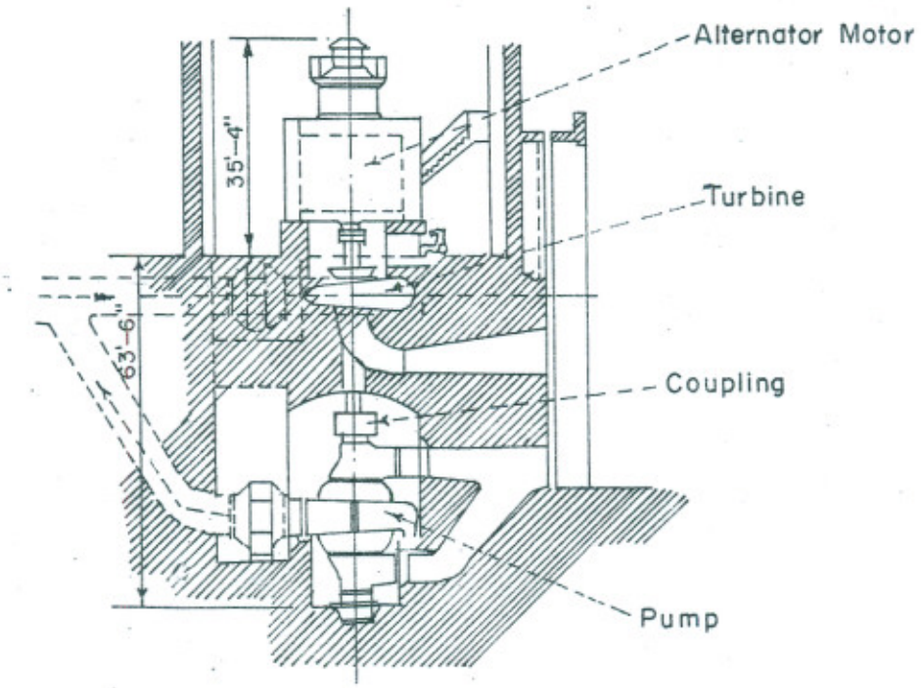

FIG — 6

A TYPICAL PUMPED STORAGE SCHEME
(FFESTINTOG U.K.)